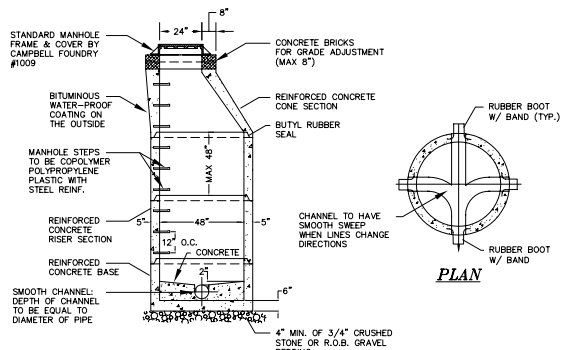

ELEVATION

PLAN

PRE-CAST MANHOLE

NOT TO SCALE

NOTES:

1. SMOOTH CHANNEL INVERT TO BE PAVED WITH CEMENT MORTAR.
2. PIPE JOINTS SHALL BE A MINIMUM OF 2' FROM OUTSIDE WALL OF MANHOLE.
3. SANITARY SEWER TO EXTEND INTO THE MANHOLE ONLY TO A POINT WHERE OUTSIDE OF SEWER MEETS INSIDE WALL OF MANHOLE.
4. OPENING FOR PIPE SHALL BE PRE-CAST. CONNECTIONS TO EXISTING MANHOLES SHALL BE MACHINE CORED.
5. MANHOLE COVERS TO BE STAMPED "SANITARY".
6. PRECAST REINFORCED CONCRETE MANHOLE SHALL BE DESIGNED FOR H20 LIVE LOAD.

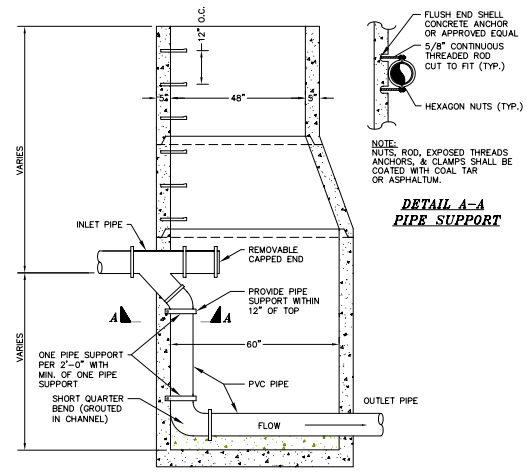

NOTE:
NUTS, ROD, EXPOSED THREADS ANCHORS, & CLAMPS SHALL BE COATED WITH COAL TAR OR ASPHALTUM.

DETAIL A-A
PIPE SUPPORT

NOTES:

1. ALL METAL PARTS SECURING VERTICAL PIPE SHALL BE STAINLESS STEEL.
2. ALL DETAILS – FRAMES, COVERS, STEPS, SEALS, ETC. TO MEET SPECIFICATIONS SHOWN IN "PRE-CAST MANHOLE" DETAIL.
3. MANHOLE DROP CONNECTION TO BE USED WHERE DIFFERENCE IN INVERT ELEVATIONS BETWEEN INLET PIPE AND OUTLET PIPE IS 2 FEET OR GREATER.

DROP CONNECTION DETAIL

NOT TO SCALE

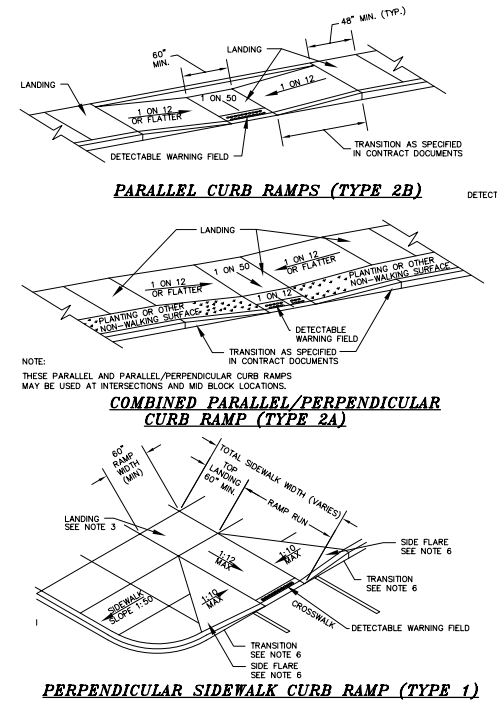

PARALLEL CURB RAMPS (TYPE 2B)

COMBINED PARALLEL/PERPENDICUAR CURB RAMP (TYPE 2A)

PERPENDICULAR SIDEWALK CURB RAMP (TYPE 1)

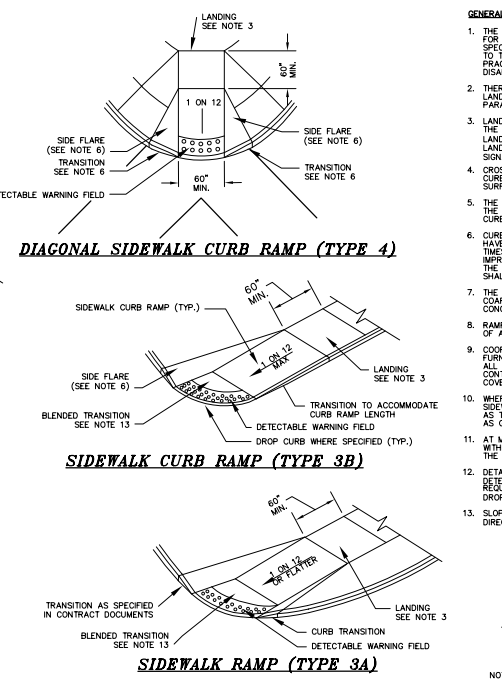

DIAGONAL SIDEWALK CURB RAMP (TYPE 4)

SIDEWALK CURB RAMP (TYPE 3B)

SIDEWALK RAMP (TYPE 3A)

CURB RAMP DETAILS

NOT TO SCALE

GENERAL NOTES:

1. THE PUBLIC SIDEWALK CURB RAMP STANDARDS DEPICTED HERE MAY NOT BE APPROPRIATE FOR ALL LOCATIONS. FIELD CONDITIONS AT INDIVIDUAL LOCATIONS MAY REQUIRE SPECIFIC DESIGNS. DESIGNS MUST BE CONSISTENT WITH THE PROVISIONS OF THIS SHEET WHENEVER PRACTICABLE IN ALTERATION OR REPAIR OPERATION PROJECTS AND WHEN STRUCTURALLY PRACTICABLE IN NEW CONSTRUCTION PROJECTS AS REQUIRED BY THE AMERICAN'S WITH DISABILITIES ACT ACCESSIBILITY GUIDELINES.
2. THERE SHALL BE A LANDING AT THE TOP OF EACH CURB RAMP. THERE SHALL BE A LANDING AT THE TOP AND AT THE BOTTOM OF EACH PARALLEL AND PARALLEL/PERPENDICULAR RAMP.
3. LANDINGS SHALL HAVE A MINIMUM CLEAR DIMENSION OF A 60" BY 60" SQUARE. THE MAXIMUM CROSS SLOPE AT LANDINGS IS 2 PERCENT IN ANY DIRECTION. LANDINGS MAY OVERLAP WITH ADJACENT LANDINGS OR A SINGLE LANDING LANDINGS MAY OVERLAP WITH THE CLEAR GROUND SPACE REQUIRED AT PEDESTRIAN SIGNAL PUSH BUTTONS.
4. CROSS SLOPES. THE MAXIMUM CROSS SLOPE OF CURB RAMPS SHALL BE 2 PERCENT. CURB RAMP SURFACES SHALL GENERALLY LIE IN CONTINUOUS PLANES WITH A MINIMUM OF SURFACE WARP.
5. THE RUNNING GRADE OF CURB RAMPS SHOULD BE AS FLAT AS PRACTICABLE. THE MAXIMUM RUNNING GRADE OF ANY PORTION OF ANY CURB RAMP SHALL BE 1:12 (8.33%). CURB RAMPS ARE NOT REQUIRED TO BE LONGER THAN 15'.
6. CURB RAMPS LOCATED WHERE PEDESTRIANS MAY WALK ACROSS THE CURB RAMP SHALL HAVE FLARED SIDES. THE LENGTH OF THE FLARES SHALL BE AT LEAST TEN (10) TIMES THE CURB HEIGHT, MEASURED ALONG THE CURB LINE. WHEN INFEASIBLE, IMPRACTICAL OR PROVIDE A LANDING THAT IS AT LEAST 48" WIDE (MEASURED FROM THE TOP OF THE RAMP TO THE BACK OF SIDEWALK) THE LENGTH OF THE FLARES SHALL BE TWELVE (12) TIMES THE CURB HEIGHT MEASURED ALONG THE CURB LINE.
7. THE SURFACE OF ALL CURB RAMPS SHALL BE STABLE, FIRM AND SLIP RESISTANT. A COARSE BROOM FINISH RUNNING PERPENDICULAR TO THE SLOPE IS RECOMMENDED ON CONCRETE RAMP SURFACES, EXCLUSIVE OF THE DETECTABLE WARNING FIELDS.
8. RAMP TRANSITIONS BETWEEN WALKS, GUTTERS, OR STREETS SHALL BE FLUSH AND FREE OF ABRUPT VERTICAL CHANGES (1/4" MAX.).
9. COORDINATE ALL TRAFFIC CONTROL DEVICES, UTILITY LOCATIONS, SIGNS, STREET FURNITURE AND DRAINAGE TO ENSURE A CONTINUOUS PEDESTRIAN ACCESS ROUTE AT ALL CURB RAMP LOCATIONS. ADVANCE FOR SIDEWALK CLEARANCE AND TRAFFIC CONTROL DEVICE LOCATIONS. DRAINAGE INLETS, DRAINAGE GRATES AND UTILITY ACCESS COVERS ARE NOT ALLOWED IN RAMP WALKING SURFACES OR LANDINGS.
10. WHERE FEASIBLE, E.G. WHERE R.O.W. WIDTH PROVIDES SUFFICIENT SPACE TO INSTALL SIDEWALKS SET BACK FROM THE CURBS, RAMP TYPES 2A AND 3A SHOULD BE INSTALLED AS THE SEPARATION PROVIDED BETWEEN SIDEWALK AND CURB OR TRAVELWAY MAKE FOR AS GREATER PEDESTRIAN SAFETY AND COMFORT.
11. AT MARKED CROSSINGS, THE FULL WIDTH OF THE RAMP SHALL BE WHOLLY CONTAINED WITHIN THE MARKINGS. THE SIDES OF THE RAMPS (THE FLARES) NEED NOT BE WITHIN THE WIDTH OF THE MARKINGS.
12. DETAILS ILLUSTRATE THAT DETECTABLE WARNINGS ARE REQUIRED. SEE THE CURRENT DETECTABLE WARNING STANDARD SHEET FOR SPECIFIC DETECTABLE WARNING REQUIREMENTS. DETAILS DO NOT SHOW DROPPED CURBS AT BOTTOMS OF CURB RAMPS. DROP CURBS MAY BE SPECIFIED.
13. SLOPES ON BLENDED TRANSITIONS SHALL NOT BE STEEPER THAN 2% (1 ON 50) IN ANY DIRECTION.

NOTE:
1) TO AVOID WHEEL CHAIR FOOTREST STRIKING PAVEMENT, PROVIDE 24" LEVEL STRIP (1:50 MAX. IN DIRECTION OF PEDESTRIAN TRAVEL). IF ALGEBRAIC DIFFERENCE BETWEEN CURB RAMP SLOPE & ROADWAY CROSS SLOPE EXCEEDS 11%

COUNTER SLOPE CONDITIONS

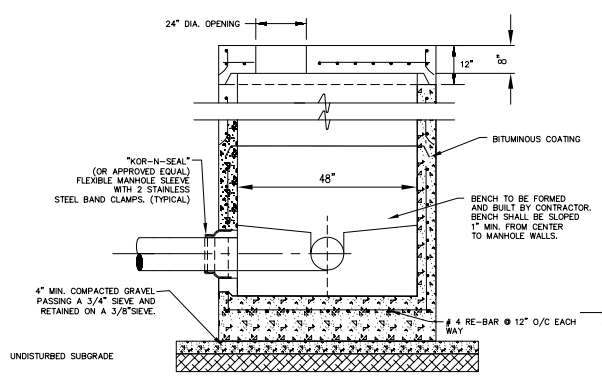

NOTE:
1) USE WHEN DEPTH DOES NOT EXCEED 5'-0".
2) ALL MATERIALS SHALL CONFORM TO THE STANDARD SPECIFICATIONS, CONSTRUCTION MATERIALS, DATED 2002 (NEW YORK STATE STANDARD SPECIFICATIONS) WITH ALL ADDENDUMS. ALL FACILITIES MUST BE NEW YORK STATE DEPARTMENT OF TRANSPORTATION APPROVED.

TYPICAL 48"DIA. SHALLOW MANHOLE WITH TOP SLAB

NOT TO SCALE

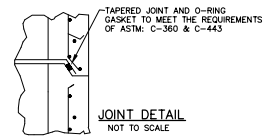

JOINT DETAIL

NOT TO SCALE

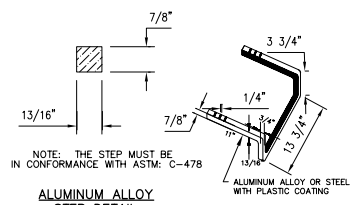

NOTE: THE STEP MUST BE IN CONFORMANCE WITH ASTM: C-478

ALUMINUM ALLOY STEP DETAIL

NOT TO SCALE

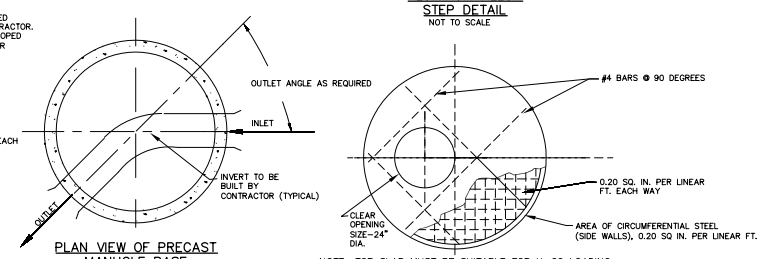

PLAN VIEW OF PRECAST MANHOLE BASE

NOT TO SCALE

NOTE: TOP SLAB MUST BE SUITABLE FOR H-20 LOADING.

REINFORCEMENT LAYOUT FOR TOP SLAB

NOT TO SCALE

SHALLOW MANHOLE DETAILS

NOT TO SCALE

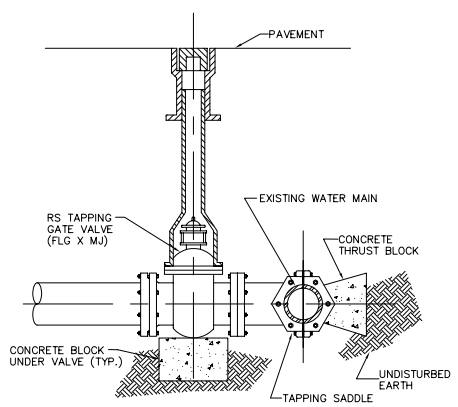

WET TAP DETAIL

NOT TO SCALE

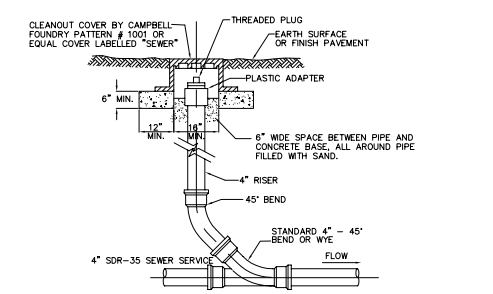

NOTE: THIS DETAIL IS TO BE USED ONLY FOR PROPOSED TOWNHOUSE STYLE AND SINGLE FAMILY STYLE UNITS.

SANITARY SEWER CLEANOUT DETAIL

NOT TO SCALE

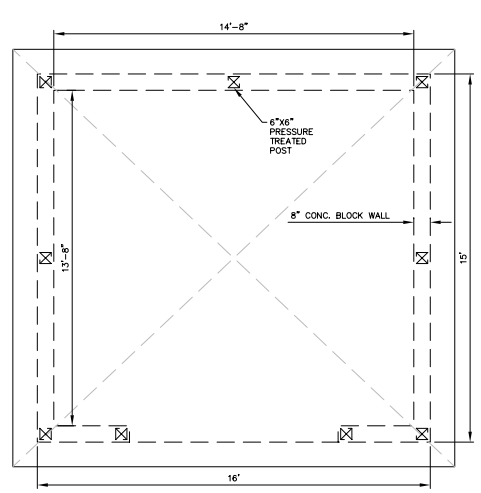

PLAN VIEW

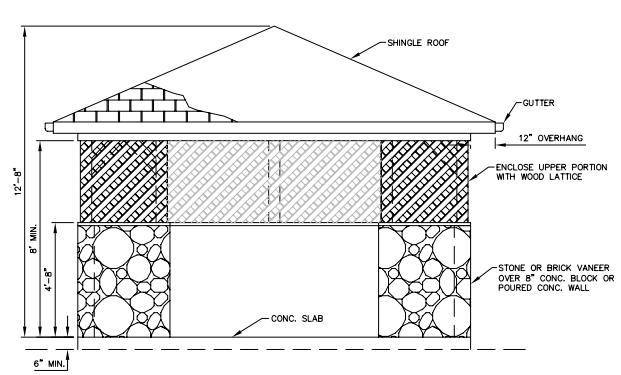

FRONT VIEW

DUMPSTER ENCLOSURE – DETAIL

NOT TO SCALE

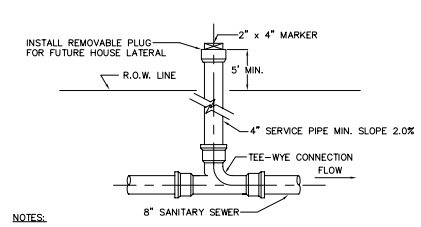

NOTES:

1. THIS DETAIL IS NOT TO BE USED FOR PROPOSED CLUBHOUSE OR PROPOSED MULTI FAMILY (CONDO STYLE) BUILDINGS.
2. TEE-WYE LOCATION TO BE SHOWN ON AS-BUILT DRAWINGS WITH DISTANCE FROM MANHOLE AND ORIENTATION (RIGHT OR LEFT).
3. END OF SERVICE LATERAL TO BE LOCATED ON AS-BUILT DRAWINGS WITH TWO LOCATION TIES TO PERMANENT AT OR ABOVE GROUND STRUCTURES.
4. 2" X 4" MARKER TO EXTEND FROM INVERT TO FINISHED GRADE (MINIMUM).

PLAN
SEWER LATERAL DETAIL

NOT TO SCALE

TWO WORKING DAYS BEFORE YOU DIG! CALL
1-800-962-7962
UNDERGROUND FACILITIES PROTECTIVE ORGANIZATION

COPIES FROM THE ORIGINAL OF THIS DOCUMENT NOT MARKED WITH AN ORIGINAL OF THE PROFESSIONAL ENGINEER'S AND/OR LAND SURVEYOR'S STAMP OR EMBOSSED SEAL SHALL NOT BE CONSIDERED VALID. TRUE COPIES.

UNAUTHORIZED ALTERATION OR ADDITION TO THIS DOCUMENT IS A VIOLATION OF SECTION 7209-2 OF THE NEW YORK STATE EDUCATION LAW.

NOTE: ALL CONCRETE USED SHALL HAVE A MINIMUM COMPRESSIVE STRENGTH OF 3,500 P.S.I. AT 28 DAYS, UNLESS OTHERWISE SPECIFIED, WITH THE EXCEPTION OF HEADWALLS AND ANY OTHER STRUCTURAL ELEMENTS, WHICH SHALL HAVE A MINIMUM COMPRESSIVE STRENGTH OF 4,000 P.S.I. AT 28 DAYS.

COPYRIGHT 2008, LANC & TULLY, P.C.

LANC & TULLY
ENGINEERING AND SURVEYING, P.C.
P.O. Box 687, Rt. 207
Goshen, N.Y. 10924
(845) 294-3700

CONSTRUCTION DETAILS SHEET 2 OF 2
PREPARED FOR LOT 10

CORNWALL COMMONS

TOWN OF CORNWALL
ORANGE COUNTY, NEW YORK

Date:	JUNE 14, 2007
Revisions:	AUGUST 9, 2007 JANUARY 28, 2008 FEBRUARY 25, 2008 MARCH 5, 2008 MARCH 24, 2008 MAY 13, 2008 JUNE 2, 2008
CAD File:	C-CONSUBDIVISION-DRAINAGE
Layout:	LOT 10 DTLS
Sheet No:	55 OF 57
Drawing No.:	A - 98 - 0148 - 00

Drawn By:	Checked By:	Scale:	Tax Map No.:
ESR		NOT TO SCALE	PROPOSED LOT 10 OF SUBDIVIDED 9-1-25.22