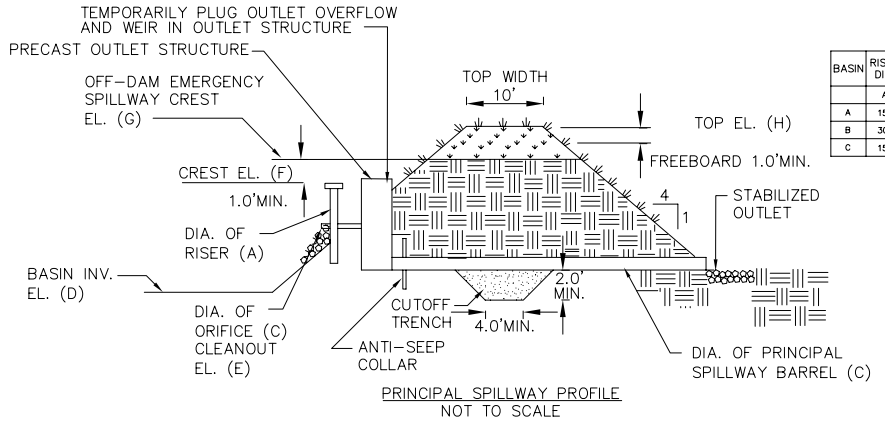

PRINCIPAL SPILLWAY PROFILE
NOT TO SCALE

MAXIMUM DRAINAGE AREA = 100 ACRES

BASIN	RISER DIA.	BARREL DIA.	ORIFICE DIA.	BASIN INV. EL.	CLEANOUT EL.	CREST EL.	SPILLWAY EL.	BERM EL.	SPILLWAY WIDTH
	A	B	C	D	E	F	G	H	I
A	15"	30"	4"	122.00	126.00	128.50	131.54	134.50	52'
B	30"	48"	18"	126.00	129.66	132.52	134.00	140.00	32'
C	15"	30"	2"	180.00	184.00	186.00	188.18	190.50	36'

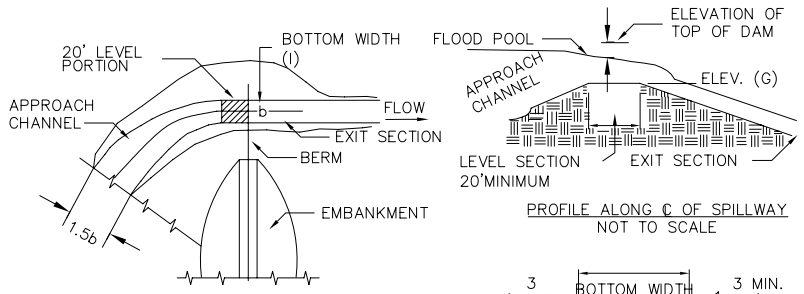

EMERGENCY SPILLWAY PLAN VIEW
NOT TO SCALE

PROFILE ALONG ℄ OF SPILLWAY
NOT TO SCALE

CROSS SECTION AT CONTROL SECTION
NOT TO SCALE

NOTE:
1. AFTER ALL CONSTRUCTION IS COMPLETE AND DISTURBED AREAS HAVE BEEN STABILIZED, CONVERT TEMPORARY SEDIMENT BASIN OUTLET INTO PERMANENT WATER QUALITY BASIN OUTLET:
–REMOVE 15" HDPE RISER PIPE
–REMOVE CONNECTION PIPE
–INSTALL ORIFICE PLATE @ OUTSIDE WALL OF OUTLET STRUCTURE (SEE DETAIL)
–ADD TRASH RACK/GRATE TO CONCRETE PAD (SEE DETAIL)

SEDIMENT BASIN DETAILS

NOT TO SCALE

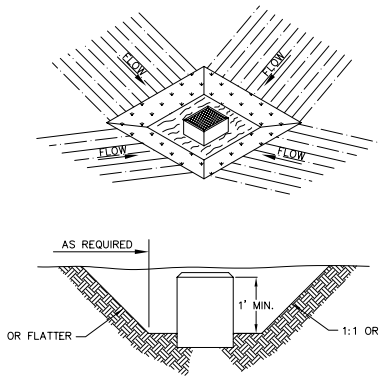

STORM INLET SEDIMENT TRAP (FOR USE WITH FIELD INLETS)

NOT TO SCALE

CONSTRUCTION SPECIFICATION FOR ST-III

1. SEDIMENT SHALL BE REMOVED AND THE TRAP RESTORED TO ITS ORIGINAL DIMENSIONS WHEN THE SEDIMENT HAS ACCUMULATED TO 1/2 THE DESIGN DEPTH OF THE TRAP. REMOVED SEDIMENT SHALL BE DEPOSITED IN A SUITABLE AREA AND IN SUCH A MANNER THAT IT WILL NOT ERODE.
2. THE STRUCTURE SHALL BE INSPECTED AFTER EACH RAIN AND REPAIRS MADE AS NEEDED.
3. CONSTRUCTION OPERATIONS SHALL BE CARRIED OUT IN SUCH A MANNER THAT EROSION AND WATER POLLUTION SHALL BE MINIMIZED.
4. THE SEDIMENT TRAP SHALL BE REMOVED AND THE AREA STABILIZED WHEN THE CONSTRUCTED DRAINAGE AREA HAS BEEN PROPERLY STABILIZED.
5. ALL CUT SLOPES SHALL BE 1:1 OR FLATTER.

SEDIMENT AND EROSION CONTROL NOTES AND CONSTRUCTION SEQUENCING

1. CONSTRUCT STABILIZED CONSTRUCTION ENTRANCES WHERE SHOWN ON THE PLAN.
2. INSTALL SEDIMENT BARRIERS/SWALES/DITCHES/DIKES AT DOWN SLOPE AREAS FROM ALL PROPOSED GRADING OPERATIONS, AND INSTALL OTHER SEDIMENTATION AND EROSION CONTROL STRUCTURES OR MEASURES AS SHOWN ON THE DRAWINGS.
3. LAND DISTURBANCE SHALL BE LIMITED TO ONLY THAT AREA NECESSARY FOR DEVELOPMENT. NO MORE THAN FIVE (5) ACRES OF UNPROTECTED SOIL SHALL BE DISTURBED AT ONE TIME. PREVIOUS EARTHWORK SHALL BE STABILIZED AS SPECIFIED BEFORE ADDITIONAL AREA IS EXPOSED.
4. CLEAR EXISTING TREES AND VEGETATION FROM AREAS TO BE EXCAVATED OR FILLED, THEN STRIP AND STOCKPILE TOPSOIL FROM ALL AREAS TO BE DISTURBED. SEED STOCKPILED TOPSOIL WITH TEMPORARY RYEGRASS COVER AS SPECIFIED BELOW (SEE NOTE 8), AND ERECT A SILT FENCE AROUND THE STOCKPILE.
5. PROTECT ALL TREES WHICH ARE TO REMAIN AND WHICH ARE IN OR NEAR CONSTRUCTION AREAS AS DIRECTED IN THE FIELD WITH SNOW FENCING PLACED AROUND THE TREE TRUNK. PLACE SNOW FENCING AT THE DRIPLINE SURROUNDING TREES, IF POSSIBLE, OR TO MAINTAIN A MINIMUM DIAMETER OF 10 FEET AROUND TREES. WHERE FENCING MUST BE PLACED CLOSER THAN THE DRIP LINE, PLACE 4 INCHES OF WOOD CHIPS OVER ROOT ZONE TO EXTEND TO THE DRIP LINE. MAINTAIN THIS WOOD CHIP PROTECTION FOR THE DURATION OF CONSTRUCTION.
6. PERFORM NECESSARY EXCAVATION OR FILL OPERATIONS TO BRING SITE TO DESIRED SUBGRADE. INSTALL STORM DRAINAGE SYSTEM.
7. INSTALL SEDIMENT BARRIERS AROUND ALL STORM DRAIN INLETS, OR MODIFY SEDIMENT CONTROL MEASURES INSTALLED IN #2 ABOVE AND MAINTAIN UNTIL ALL DISTURBED AREAS ARE STABILIZED WITH VEGETATION AND ALL PAVEMENTS ARE PAVED WITH A BASE COURSE.
8. SEED ALL DISTURBED AREAS WHICH WILL REMAIN UNDISTURBED FOR A PERIOD OF 7 DAYS WITH TEMPORARY RYEGRASS COVER, AS FOLLOWS (METHOD OF SEEDING IS OPTIONAL):
   A. LOOSEN SEEDBED BY DISCING TO A 4" DEPTH.
   B. SEED WITH 6 LBS PER ACRE PERENNIAL OR ANNUAL RYEGRASS.
   C. MULCH WITH 100–200 BALES PER ACRE OF BLOWN AND CHOPPED HAY BOUND IN PLACE WITH 2000 LBS PER ACRE CELLULOSE FIBER MULCH, AND WITH AN APPROVED TACKIFIER BINDER.
   D. WHERE NOTED ON THE PLAN, AND ON SLOPES GREATER THAN OR EQUAL TO 3:1, PROVIDE SOIL STABILIZATION MATTING.
9. IF CONSTRUCTION IS SUSPENDED OR COMPLETED, ALL DISTURBED AREAS SHALL BE SEEDED AND MULCHED IMMEDIATELY. ALL SLOPES STEEPER THAN ONE ON THREE (V/H) AND PERIMETER TRENCHES AND TRAP EMBANKMENTS SHALL, ON COMPLETION, BE IMMEDIATELY STABILIZED WITH TEMPORARY SEEDING AND MULCHING.
10. AFTER COMPLETION OF SITE CONSTRUCTION, FINE GRADE AND SPREAD TOPSOIL ON ALL LAWN AREAS AND SEED WITH PERMANENT LAWN MIX AS FOLLOWS (SEE LANDSCAPE PLAN FOR OTHER PLANTING INFORMATION):
    A. LIME TOPSOIL TO pH 6.0.
    B. FERTILIZE WITH 20 LBS PER SQ. FT. OF 5–10–10, 50% WATER SOLUBLE NITROGEN FERTILIZER.
    C. SEED WITH 5 LBS PER 1000 SQ. FT. OF THE FOLLOWING MIXTURE, OR OTHER MIXTURE APPROVED BY THE LANDSCAPE ARCHITECT: 40% JAMESTOWN CHEWINGS FESCUE, 40% BARON KENTUCKY BLUEGRASS AND 20% YORKTOWN PERENNIAL RYEGRASS.
    D. MULCH AS DESCRIBED FOR TEMPORARY SEEDING (NOTE 8 ABOVE).
    E. FERTILIZE 4 WEEKS AFTER GERMINATION WITH 10 LBS 20–10–10 FERTILIZER PER 1000 SQ. FT.
11. DURING THE PROGRESS OF CONSTRUCTION, MAINTAIN ALL SEDIMENT TRAPS, BARRIERS, AND FILTERS AS NECESSARY TO PREVENT THEIR BEING CLOGGED UP WITH SEDIMENT.
12. AFTER PAVEMENTS ARE INSTALLED AND PERMANENT VEGETATIVE COVER AND PLANTINGS ARE ESTABLISHED, REMOVE SEDIMENT BARRIERS AND SEED THOSE DISTURBED AREAS.
13. MAINTAIN ALL SEEDED AND PLANTED AREAS TO INSURE A VIABLE STABILIZED VEGETATIVE COVER.
14. STRUCTURAL MEASURES MUST BE MAINTAINED TO BE EFFECTIVE. IN GENERAL, THESE MEASURES MUST BE PERIODICALLY INSPECTED TO INSURE STRUCTURAL INTEGRITY, TO DETECT VANDALISM DAMAGE, AND FOR CLEANING AND REPAIR WHENEVER NECESSARY.
15. DURING CONSTRUCTION, ALL STRUCTURES SHOULD BE INSPECTED WEEKLY AND AFTER EVERY RAIN. REMOVE ACCUMULATED SEDIMENT AND STOCKPILE AND STABILIZE IN AN AREA NOT SUBJECT TO FURTHER EROSION.
16. AFTER CONSTRUCTION IS COMPLETED, PERMANENT SEDIMENT OR EROSION CONTROL STRUCTURES SHOULD BE INSPECTED AT LEAST SEMI–ANNUALLY AND AFTER EVERY RAIN.

BEST MANAGEMENT PRACTICES FOR SITE FACILITY MAINTENANCE

THE OWNER WILL BE RESPONSIBLE FOR THE MAINTENANCE AND OPERATION OF ALL SITE RELATED FACILITIES, INCLUDING THE STORM WATER SEDIMENT AND DETENTION BASINS AND THE FOLLOWING MEASURES AND/OR STRUCTURES, AS APPLICABLE AND SHOWN ON THE PLANS:

BIOFILTER/SEDIMENT BASINS

INSPECTIONS SHALL BE MADE MONTHLY DURING CONSTRUCTION AND DURING THE FIRST GROWING SEASON, AND ON AN ANNUAL BASIS THEREAFTER TO ACCOMPLISH THE FOLLOWING:

1. REMOVE ACCUMULATED SEDIMENT AND CLEAN OUT AND/OR REPLACE THE FILTER GRAVEL BED AT THE OUTFALL PIPE WHENEVER ACCUMULATED SEDIMENT REACHES A VOLUME OF 10% OF THE AVAILABLE BASIN CAPACITY (BASED ON ONE HALF INCH OF RUNOFF VOLUME FROM THE APPLICABLE TRIBUTARY AREA).
2. RESTORE ANY DISTURBED PLANT MATERIAL AND RESTORE ANY ERODED EMBANKMENTS.
3. REMOVE ACCUMULATED DEBRIS WITHIN THE BASIN AND AT OUTFALL STRUCTURES.

WATER QUALITY INLETS AND STORM DRAIN INLETS

1. WATER QUALITY INLETS SHALL BE CLEANED OUT AT LEAST TWICE A YEAR TO REMOVE POLLUTANTS. REMOVED MATERIAL SHOULD BE TAKEN TO A TREATMENT PLANT OR APPROVED LANDFILL FOR DISPOSAL.
2. STORM WATER INLETS THROUGHOUT THE SITE SHALL BE INSPECTED ANNUALLY FOR ACCUMULATED SEDIMENT OR OTHER PROBLEMS AND REPAIRED AS NECESSARY.

PARKING AND ROADWAY PAVEMENTS

PARKING AREA AND ROADWAY PAVEMENTS SHALL BE SWEPT ON A REGULAR BASIS TO REMOVE ACCUMULATED SEDIMENT. COLLECTED SEDIMENT SHALL BE REMOVED TO AN APPROVED DISPOSAL SITE WHICH WILL NOT ALLOW THE RE–ENTRANCE OF SILT INTO THE STORM WATER DRAINAGE SYSTEM.

VEGETATIVE STABILIZATION

1. ALL VEGETATIVE PLANTING ON AREAS WHICH HAVE BEEN DISTURBED AND ARE FINISH GRADED SHALL BE INSPECTED AFTER EACH RAIN EVENT. PLANTING (OR SEEDING) SHALL BE MAINTAINED IN A VIABLE CONDITION TO STABILIZE THE SOIL AND TO PREVENT SOIL EROSION. RESTORE ALL SITE PLANTING AND/OR SEEDING WHICH HAS BEEN DAMAGED TO A VIABLE CONDITION.
2. IF VEGETATIVE STABILIZATION HAS BEEN DAMAGED FROM STORM WATER EROSION, CORRECT UPSTREAM CONDITIONS WHICH CAUSED THE EROSION. CHECK DAMS MAY BE REQUIRED IN DRAINAGE WAYS, AND STONE OUTFALL APRONS MAY BE REQUIRED TO BE REPAIRED AT STORM WATER OUTLETS.

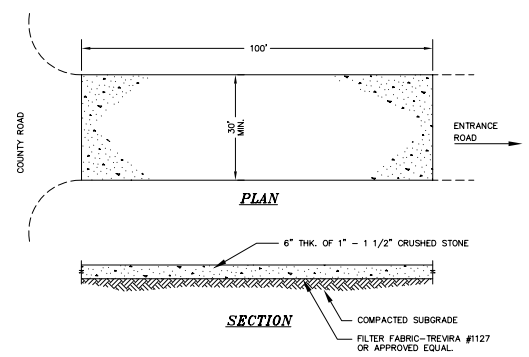

NOTE:
ENTRANCE SHALL BE MAINTAINED AS CONDITIONS DEMAND TO PREVENT TRACKING OF SEDIMENT ONTO PUBLIC RIGHTS OF WAY.

STABILIZED CONSTRUCTION ENTRANCE

NOT TO SCALE

ALL SEDIMENTATION STRUCTURES WILL BE INSPECTED AND MAINTAINED ON A REGULAR BASIS.

A CRUSHED STONE, VEHICLE WHEEL–CLEANING BLANKET WILL BE INSTALLED WHENEVER A CONSTRUCTION ACCESS ROAD INTERSECTS ANY PAVED ROADWAY. SAID BLANKET WILL BE COMPOSED OF 6" DEPTH OF 1"–1 1/2" CRUSHED STONE, WILL BE AT LEAST 30' X 100' AND SHOULD BE PLACED ON COMPACTED SUB–GRADE AND SHALL BE MAINTAINED.

ALL DRIVEWAYS MUST BE STABILIZED WITH 1" – 1 1/2" CRUSHED STONE OR SUB–BASE PRIOR TO INDIVIDUAL HOME CONSTRUCTION.

PAVED ROADWAYS MUST BE KEPT CLEAN AT ALL TIMES.

ALL CATCH BASIN INLETS WILL BE PROTECTED WITH A CRUSHED STONE OR HAYBALE FILTER (FILTER DETAILS APPEAR ON PLAN).

ALL STORM DRAINAGE OUTLETS WILL BE STABILIZED, AS REQUIRED, BEFORE DISCHARGE POINTS BECOME OPERATIONAL.

ALL SOIL EROSION AND SEDIMENT CONTROL STRUCTURES MUST BE DETAILED ON THE PLAN.

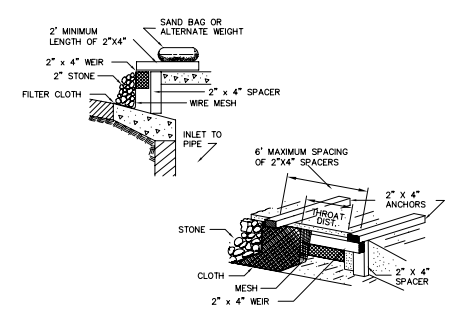

CONSTRUCTION SPECIFICATIONS

1. FILTER FABRIC SHALL HAVE AN EOS OF 40–85.
2. WOODEN FRAME SHALL BE CONSTRUCTED OF 2" x 4" CONSTRUCTION GRADE LUMBER.
3. WIRE MESH ACROSS THROAT SHALL BE A CONTINUOUS PIECE 30 INCH MINIMUM WIDTH WITH A LENGTH 4 FEET LONGER THAN THE THROAT. IT SHALL BE SHAPED AND SECURELY NAILED TO A 2" x 4" WEIR.
4. THE WEIR SHALL BE SECURELY NAILED TO 2" x 4" SPACERS 9 INCHES LONG SPACED NO MORE THAN 6 FEET APART.
5. THE ASSEMBLY SHALL BE PLACED AGAINST THE INLET AND SECURED BY 2" x 4" ANCHORS 2 FEET LONG EXTENDING ACROSS THE TOP OF THE INLET AND HELD IN PLACE BY SANDBAGS OR ALTERNATE WEIGHTS.

MAXIMUM DRAINAGE AREA 1 ACRE

CURB DROP INLET PROTECTION (FOR USE WITH CURB INLETS)

NOT TO SCALE

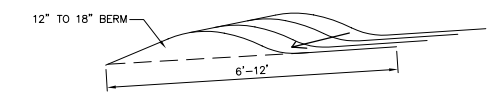

NOTE: THE OUT FLOW END OF THE DIVERSION BERM SHOULD BE OPEN TO KEEP WATER FROM ACCUMULATING, AND BE PROTECTED BY A BUFFER OR FILTER ZONE TO CLEAR THE WATER OF SEDIMENT AND PREVENT EROSION.

TYPICAL DIVERSION BERM DETAIL

NOT TO SCALE

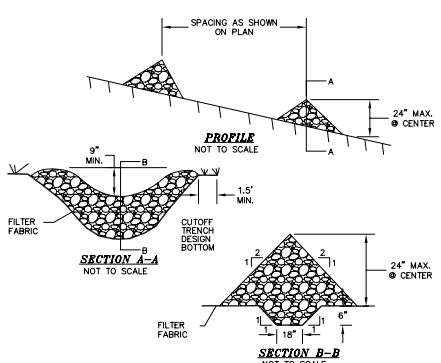

CHECK DAM DETAIL

NOT TO SCALE

FOR CONSTRUCTION SPECIFICATIONS REFER TO "NY GUIDELINES FOR URBAN EROSION AND SEDIMENT CONTROL"

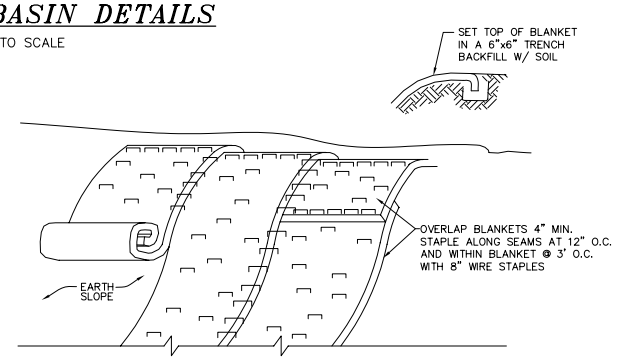

SLOPE STABILIZATION DETAIL

NOT TO SCALE

NOTES:
1. STABILIZE PREPARED EARTHEN SLOPE WITH A BIODEGRADABLE NATURAL FIBER NETTING APPROVED TYPES ARE AS FOLLOWS:
   –C350 –NORTH AMERICAN GREEN #1–800–772–2040
   –ECOCOIR 9000– EASTERN PRODUCTS, INC. #1–201–234–5050
   –ERO–MAT V125C– EROSION CONTROL TECH. #1–800–245–0551
   –ALL SLOPE RESTORATION TO GET 4" TOPSOIL
2. SEED SLOPE PRIOR TO INSTALLING EROSION CONTROL NETTING.
3. AFTER NETTING IS INSTALLED, PLANT GROUND–COVER, TREES & FORSYTHIA THROUGH SLITS CUT IN FABRIC.

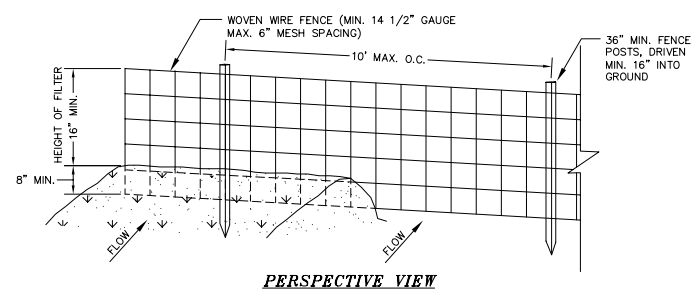

PERSPECTIVE VIEW

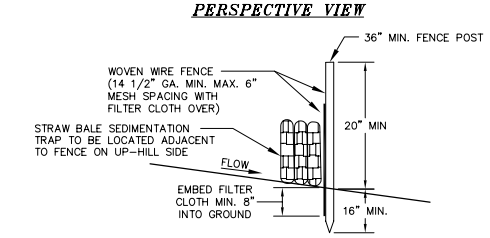

SILTATION FENCE

NOT TO SCALE

THE OWNER IS ASSIGNED THE RESPONSIBILITY FOR THE CONSTRUCTION AND MAINTENANCE OF THE MEASURES AS DETAILED ON THIS PLAN AND ACCOMPANYING TECHNICAL SPECIFICATIONS

THIS EROSION CONTROL PLAN SHALL BE USED FOR EROSION CONTROL METHODS AND LOCATIONS ONLY. DO NOT USE THIS PLAN FOR BUILDING, PAVED AREA, UTILITY LOCATIONS, ETC.

COPIES FROM THE ORIGINAL OF THIS DOCUMENT NOT MARKED WITH AN ORIGINAL OF THE PROFESSIONAL ENGINEER'S AND/OR LAND SURVEYOR'S STAMP OR EMBOSSED SEAL SHALL NOT BE CONSIDERED VALID, TRUE COPIES.

UNAUTHORIZED ALTERATION OR ADDITION TO THIS DOCUMENT IS A VIOLATION OF SECTION 7209–2 OF THE NEW YORK STATE EDUCATION LAW.

Dig Safely. New York
800-962-7962
www.digsafelynewyork.org
☐ Call Before You Dig
☐ Wait The Required Time
☐ Confirm Utility Response
☐ Respect the Marks
☐ Dig With Care

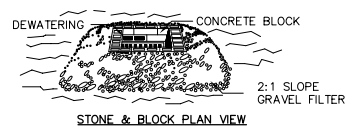

STONE & BLOCK PLAN VIEW

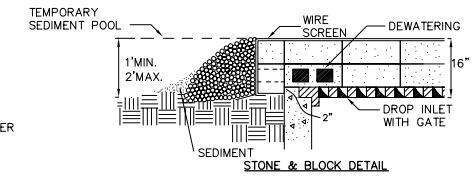

STONE & BLOCK DETAIL

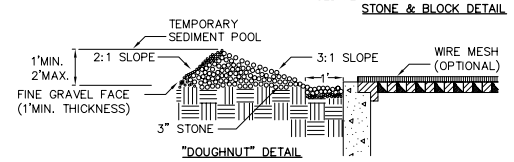

"DOUGHNUT" DETAIL

STONE & BLOCK INLET PROTECTION DETAIL (FOR USE WITH CURB INLETS AT ROAD LOW POINTS)

NOT TO SCALE

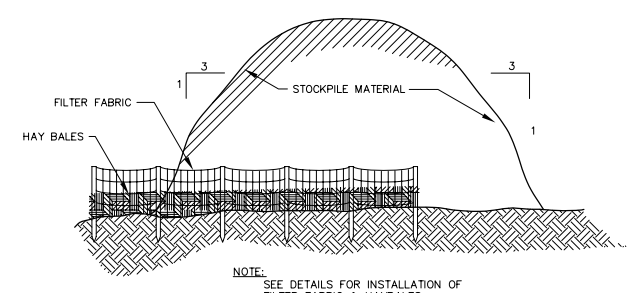

NOTE:
SEE DETAILS FOR INSTALLATION OF FILTER FABRIC & HAYBALES

TYPICAL STOCKPILE DETAIL

NOT TO SCALE

COPYRIGHT 2005, LANC & TULLY, P.C.

LANC & TULLY
ENGINEERING AND SURVEYING, P.C.
P.O. Box 687, Rt. 207
Goshen, N.Y. 10924
(914) 294–3700

EROSION CONROL DETAILS
PREPARED FOR 10 LOT SUBDIVISION

CORNWALL COMMONS
TOWN OF CORNWALL
ORANGE COUNTY, NEW YORK

Date:	MARCH 31, 2006
Revisions:	MAY 18, 2006 MAY 23, 2006 SEPTEMBER 19, 2006 JUNE 14, 2007 AUGUST 9, 2007
CAD File:	SC–CORNWALSUBDIVISION–DRAINAGE
Layout:	ERO CON DTLS
Sheet No.:	14 OF 16
Drawing No.:	A – 98 – 148 – 301
Drawn By:	CRV
Checked By:	
Scale:	N.A.
Tax Map No.:	4–1–25.2 & 37–1–45.1