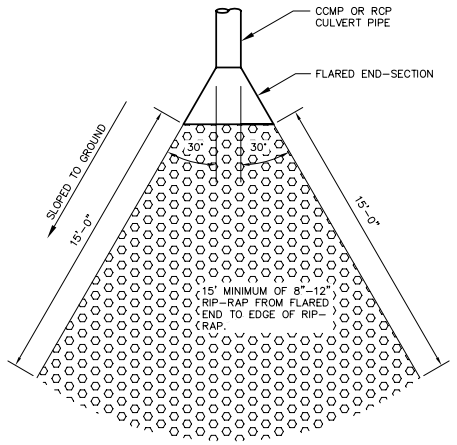

FLARED CULVERT END SECTION

NOT TO SCALE

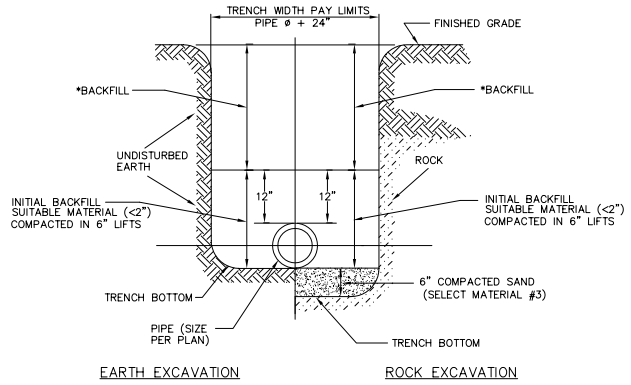

* BACKFILL TO BE COMPACTED IN 8" LIFTS WITH NO STONES OVER 6" IN ANY DIMENSION.

TRENCH CROSS SECTION

NOT TO SCALE

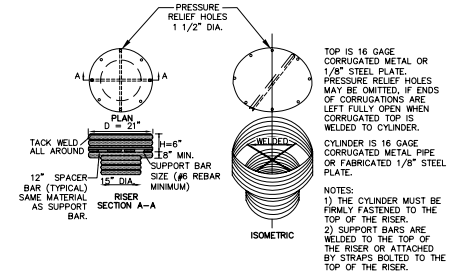

CONCENTRIC TRASH RACK & ANTI-VORTEX DEVICE

NOT TO SCALE

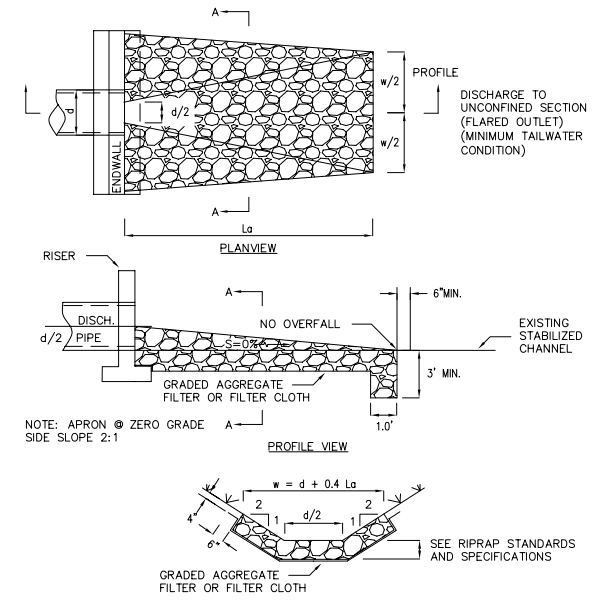

NOTE:
SEE RIPRAP STANDARDS AND SPECIFICATIONS
MINIMUM TAILWATER CONDITIONS

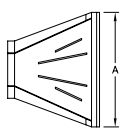

PIPE DIAMETER						
DIMENSION	10/12	15	18	24	30	36
A	42	41	49	59.5	88	88
B	14.5	19	22	28	36	43
C	33	34	43	48	63.5	66.5
D	6	6	6	6	6	6

NOTE: ALL MEASUREMENTS IN INCHES

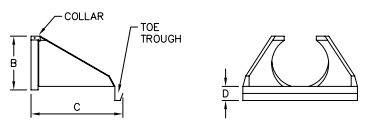

HDPE FLARED END SECTION

NOT TO SCALE

COLLAR WELDED IN PLACE BARREL SECTION

NOT TO SCALE

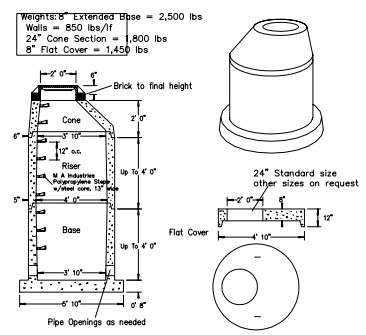

SPECIFICATIONS	PRECAST MANHOLES 4' ID BASE, RISER & TOP
Concrete Minimum Strength: 4,000 psi at 28 days Reinforcement: 6"x6"x6 ga. Wire Mesh Air Entrainment: 5% Construction Joint: Butyl Rubber Sealant Pipe Connections: Rubber Boots available Load Rating: H20, truck traffic	Woodard's Concrete Products, Inc. 4228 Lybolt Road, Bullville, NY 10915 (914) 361-3470 / Fax 361-4050 Page 91

DRAINAGE MANHOLE DETAIL DMH TYPE 1

NOT TO SCALE

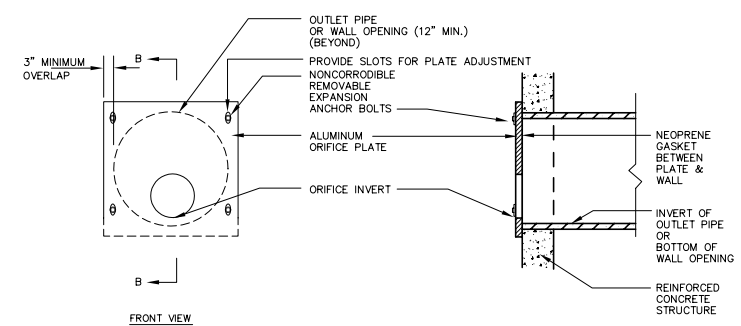

OUTLET STRUCTURE ORIFICE PLATE DETAILS

NOT TO SCALE

DETENTION BASIN DATA

	DETENTION BASIN	A	B	C
A	INVERT OF OUTLET STRUCTURE	124.25	126.81	182.73
B1	OUTLET STRUCTURE DIMENSIONS (INSIDE LENGTH)	4'	4'	4'
B2	OUTLET STRUCTURE DIMENSIONS (INSIDE WIDTH)	4'	4'	4'
C	TOP OF STRUCTURE ELEVATION	129.13	134.10	186.34
D	BOTTOM OF STRUCTURE ELEVATION	123.58	126.14	182.06
E	ORIFICES: DIAMETER/INVERT ELEVATION	3" DIA 124.24	9" DIA 126.81	3" DIA 180.73
F	CULVERT DIAMETER/INVERT ELEVATION:	30" DIA 124.24	36" DIA 126.81	30" DIA 180.73
G	RECTANGULAR WEIR ELEVATION	128.13	132.58	185.34
H	RECTANGULAR WEIR WIDTH	7'	5.5'	3'
	FIBERGLASS GRATE DIMENSION	4' X 4'	4' X 4'	4' X 4'
I	TOP OF BERM	132.00	140.00	188.00
	EMERGENCY SPILLWAY: ELEVATION	127.90		187.34
	LENGTH	2.5'		1.25'
	DEPTH	0.67'		0.67'

BASIN OUTLET STRUCTURE CHART

NOT TO SCALE

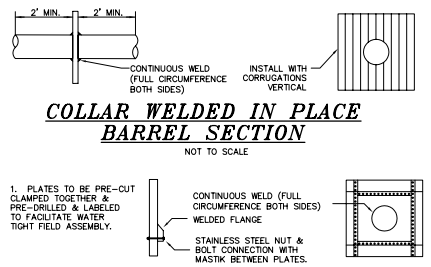

MULTI-PIECE COLLAR FOR LARGE PIPES

NOT TO SCALE

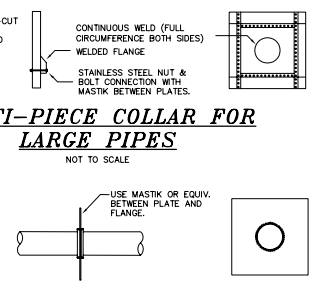

COLLAR FOR FLANGE JOINT PIPE

TYPICAL ANTI-SEEP COLLARS

NOT TO SCALE

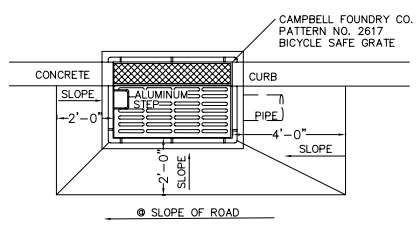

PLAN VIEW CB TYPE 1

NOT TO SCALE

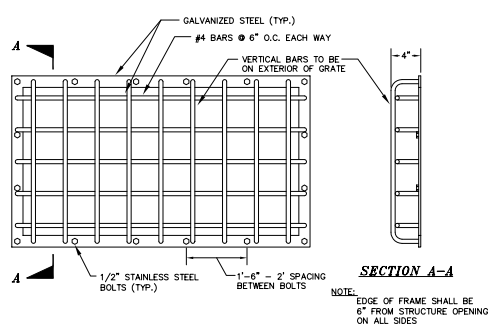

INLET COVER FOR OUTLET STRUCTURE

NOT TO SCALE

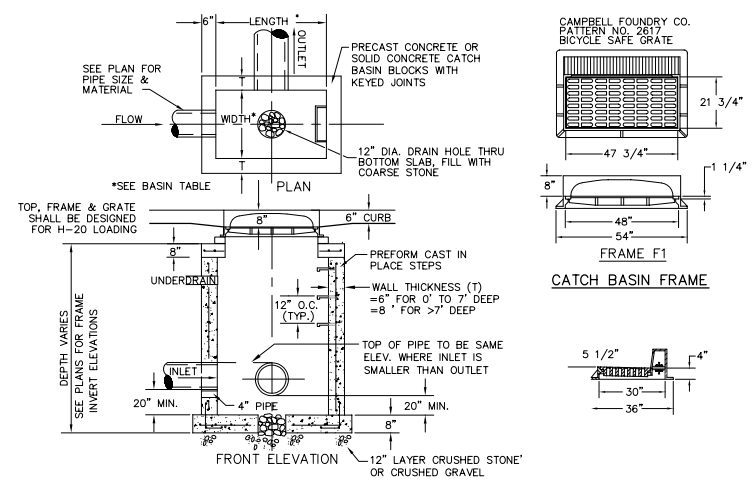

NOTE: MINIMUM CONCRETE STRENGTH SHALL BE 3500 P.S.I. AT 28 DAYS.

TYPICAL CATCH BASIN DETAIL

NOT TO SCALE

NOTE: ALL CONCRETE USED IS TO HAVE A MINIMUM STRENGTH OF 3500 P.S.I. AT 28 DAYS, UNLESS IT IS STRUCTURAL CONCRETE, WHICH IS TO HAVE A MINIMUM STRENGTH OF 4000 P.S.I. AT 28 DAYS. ALL CONCRETE IS TO CONFORM TO SECTION 12.B 3 & 4 OF THE TOWN OF CORNWALL ROAD SPECIFICATIONS.

COPYRIGHT 2005, LANC & TULLY, P.C.

COPIES FROM THE ORIGINAL OF THIS DOCUMENT NOT MARKED WITH AN ORIGINAL OF THE PROFESSIONAL ENGINEER'S AND/OR LAND SURVEYOR'S STAMP OR EMBOSSED SEAL SHALL NOT BE CONSIDERED VALID, TRUE COPIES.

UNAUTHORIZED ALTERATION OR ADDITION TO THIS DOCUMENT IS A VIOLATION OF SECTION 7209-2 OF THE NEW YORK STATE EDUCATION LAW.

LANC & TULLY
ENGINEERING AND SURVEYING, P.C.
P.O. Box 687, Rt. 207
Cornwall, N.Y. 12084
(914) 534-2700

DRAINAGE DETAILS
PREPARED FOR 10 LOT SUBDIVISION

CORNWALL COMMONS

TOWN OF CORNWALL
ORANGE COUNTY, NEW YORK

Drawn By:	Checked By:	Scale:	Tax Map No.:
CRV		N.A.	9-1-25.2 & 37-1-45.1

Date: MARCH 31, 2006
Revisions: MAY 18, 2006; MAY 23, 2006; SEPTEMBER 19, 2006; JUNE 14, 2007; AUGUST 9, 2007
CAD File: CC-CORNSUBDIVISION-DRAINAGE
Layout: DRAINAGE DTLS
Sheet No.: 16 OF 16
Drawing No.: A - 98 - 148 - 301